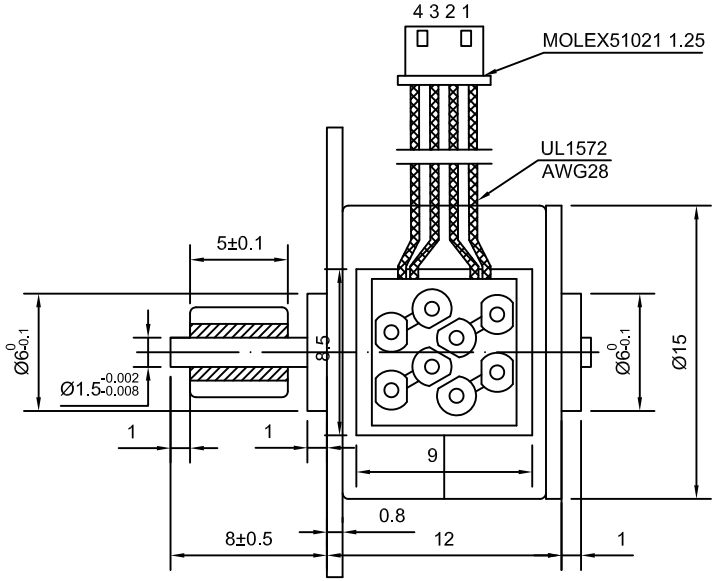

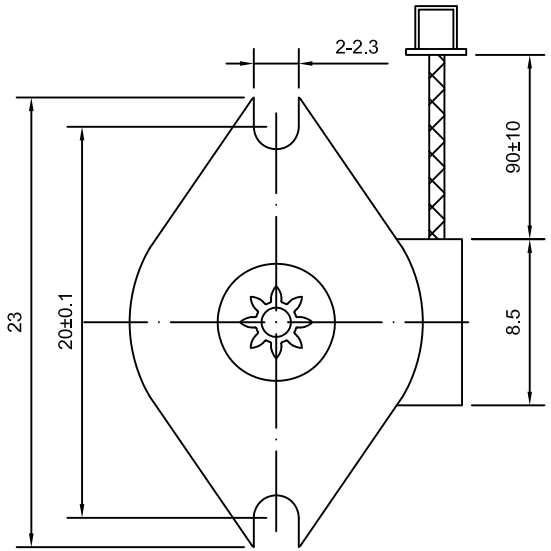

SPECIFICATION	VALUE
NO.OF PHASE	2
AMPS/PHASE	0.40
RESISTANCE/PHASE(Ohms)@25°C	30.5±7%
INDUCTANCE/PHASE(mH)@1KHz	6.0±20%
HOLDING TORQUE(mN.m)[lb-in]	3.5[0.031]
STEP ANGLE(°)	18.0±7%
PULL-IN RATE(PPS)	1200
PULL-IN TORQUE(m.Nm)	0.88
DETENT TORQUE(m.Nm)	0.98
ROTOR INERTIA(g-cm²)	1.0
WEIGHT(g)[lb]	11[0.02]
LIFE(h)@20°C 500PPS	3000
INSULATION RESISTANCE(MΩ) @DC 500V	100
TEMPERATURE RISE:MAX.75°C	
AMBIENT TEMPERATURE -10°C~40°C[14°F~104°F]	
INSULATION CLASS E 120°C[248°F]	
DIELECTRIC STRENGTH 650±50 VAC FOR 2 Sec.(BETWEEN THE MOTOR COILS AND THE MOTOR CASE)	

FULL STEP 2 PHASE-Ex. ,
WHEN FACING MOUNTING END (X)

PIN No.	WIRE COLOR	STEP			
		1	2	3	4
1	ORN	+	+	-	-
2	YEL	-	-	+	+
3	BLK	+	-	-	+
4	BRN	-	+	+	-

GEAR SPECIFICATION	
Number of Teeth	8
Module	0.45
Pressure Angle	20°
Pitch Diameter	Ø3.6
Outside Diameter	Ø4.8 0 -0.05
Accuracy	IT7-8
Material	LY12

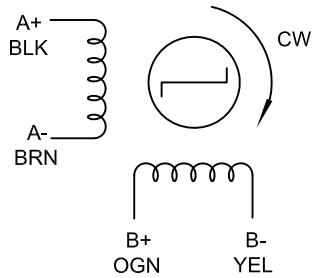

	APVD		5.16.2019	PM STEPPER MOTOR
	CHKD			
2:1	DRN			15PM20L02
SCALE	SIGNATURE		DATE	